Navigation Computer/Rearview Cameras

Alvin Mark Bruss | 7/31/2011

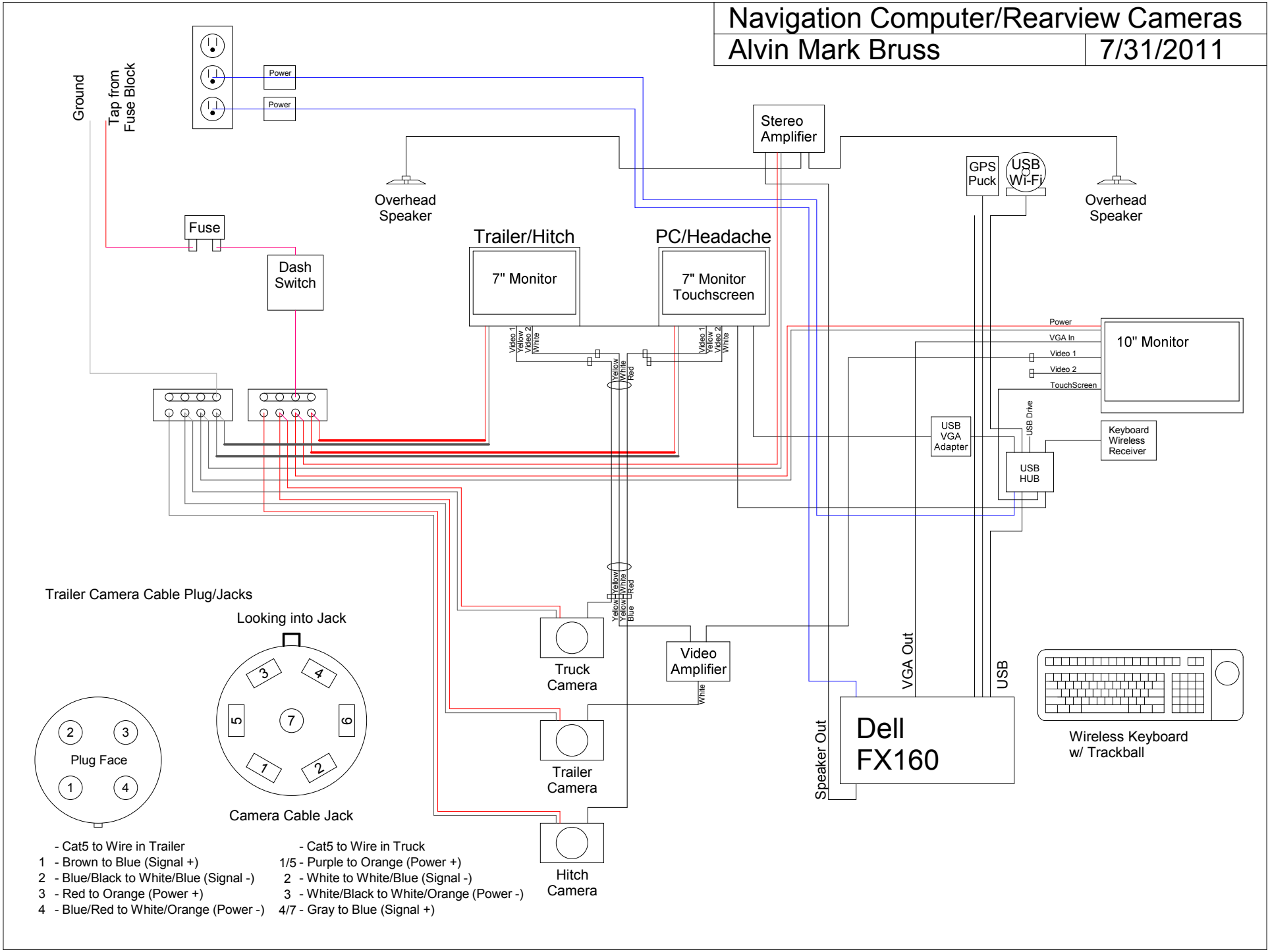

- Cat5 to Wire in Trailer
1 - Brown to Blue (Signal +)
2 - Blue/Black to White/Blue (Signal -)
3 - Red to Orange (Power +)
4 - Blue/Red to White/Orange (Power -)

- Cat5 to Wire in Truck
1/5 - Purple to Orange (Power +)
2 - White to White/Blue (Signal -)
3 - White/Black to White/Orange (Power -)
4/7 - Gray to Blue (Signal +)